11

Electric Circuits

11.6

Kirchhoff's Loop rule

Bell Ringer

(II) Determine (*a*) the equivalent resistance of the circu
shown in Fig. 19–48, (*b*) the voltage across each resistor, an
(*c*) the current through
each resistor.

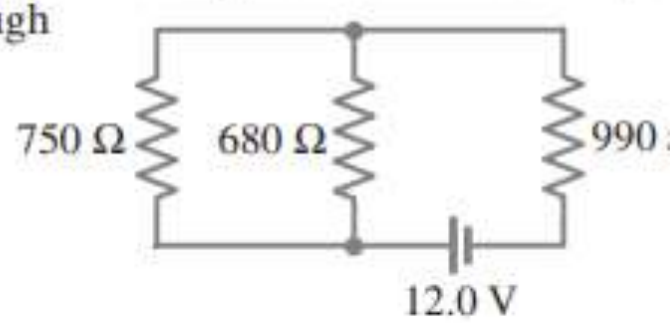

FIGURE 19–48
Problem 16.

Will Post Lesson AFTER Bellringer

11.6.1

How Conservation of Energy Leads to Kirchhoff's Rules

Graphs of Voltage vs Position in Circuit

Bell Ringer

(II) Determine (*a*) the equivalent resistance of the circuit shown in Fig. 19–48, (*b*) the voltage across each resistor, and (*c*) the current through each resistor.

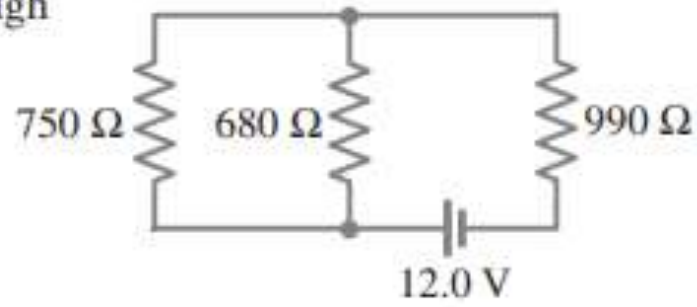

FIGURE 19–48
Problem 16.

(16) $R_{T_1}^{-1} = \left(\frac{1}{750} + \frac{1}{680}\right)$

Parallel

$R_{T_1} = 356.64$

$R_{T_2} = R_{T_1} + 990$

Series

(a) $R_{T_2} = 1346.643357\ \Omega$

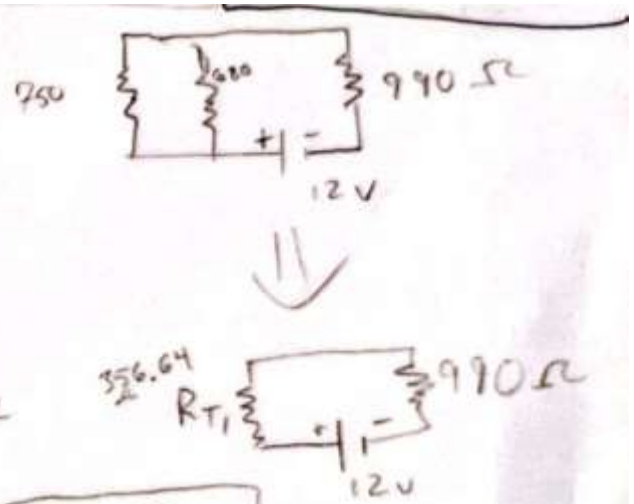

(b) I and Voltage Drops

$V = IR$

$I = \frac{V}{R_{T2}}$

$I = \frac{12}{1346.64}$

$I = 8.91 \cdot 10^{-3}$ A

$V_d(990) = (8.91 \cdot 10^{-3})(990\ \Omega)$

$V_d = 8.822\text{v}$

$V_d\left(\begin{matrix}750\\+\\680\end{matrix}\right) = 12\text{v} - 88.22\text{v}$

$V_d = 3.178\text{v}$

(c) I (Ω)

$I(990) = 8.91 \cdot 10^{-3}$ A

$I(750)$

$I = \frac{3.178}{750}$

$I = 4.24 \cdot 10^{-3}$ A

$I(680) = \frac{V}{R} = \frac{3.178}{680}$

$I(680) = 4.67 \cdot 10^{-3}$

Energy!

$$\Delta U_E = q\Delta V$$

Kirchhoff's Loop Rule

- If a single charge makes a complete loop around the circuit, conservation of energy says $\Delta U_E = 0$
- In circuit terms, $\sum \Delta V = 0$

$$\sum \Delta V = +V_{battery} - V_{resistor} = 0$$

$$V_{battery} = V_{resistor}$$

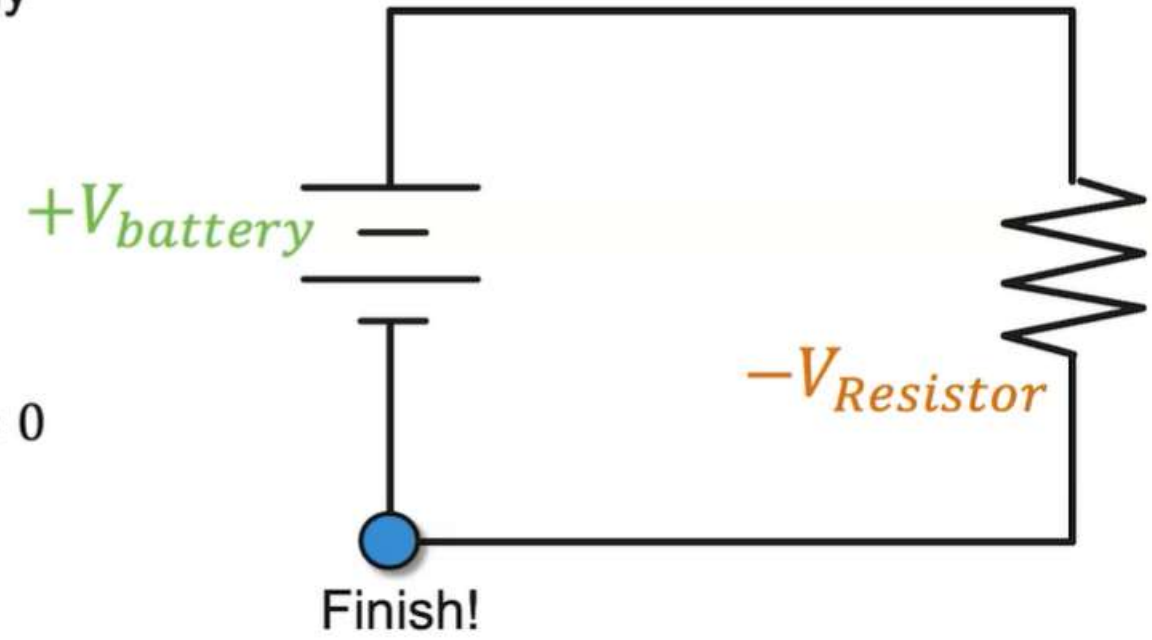

Kirchhoff's Loop Rule

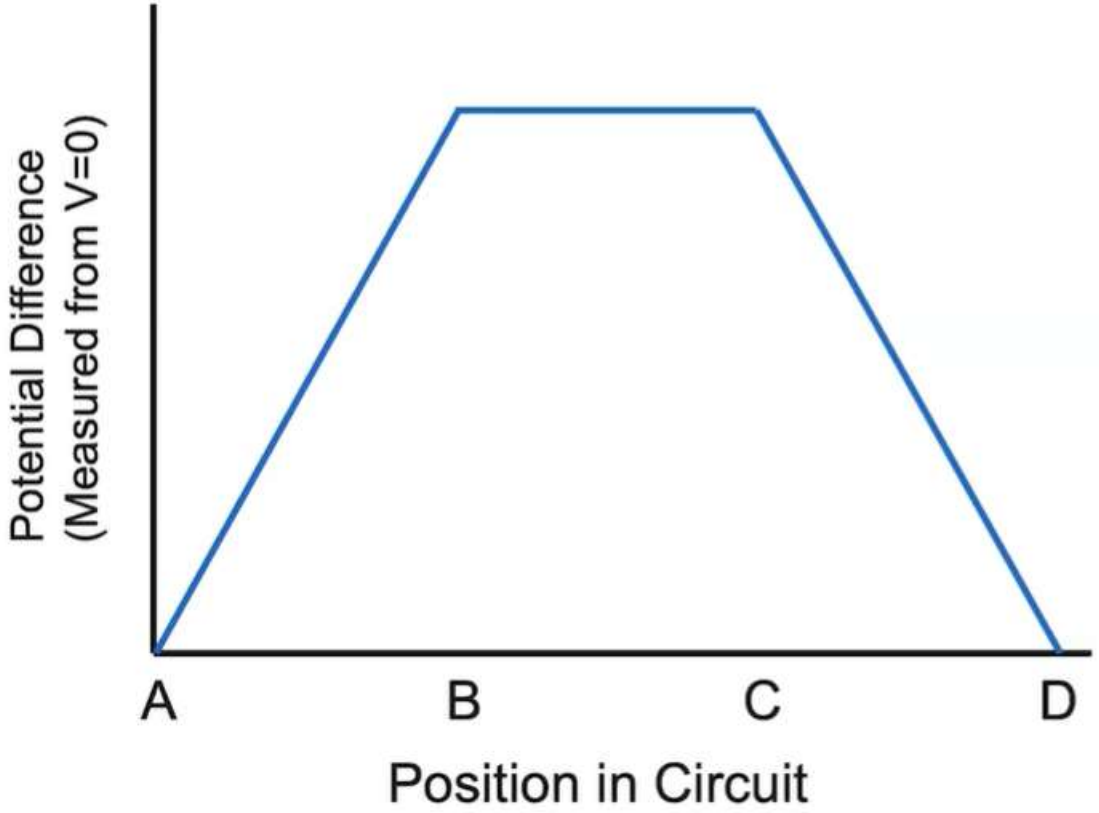

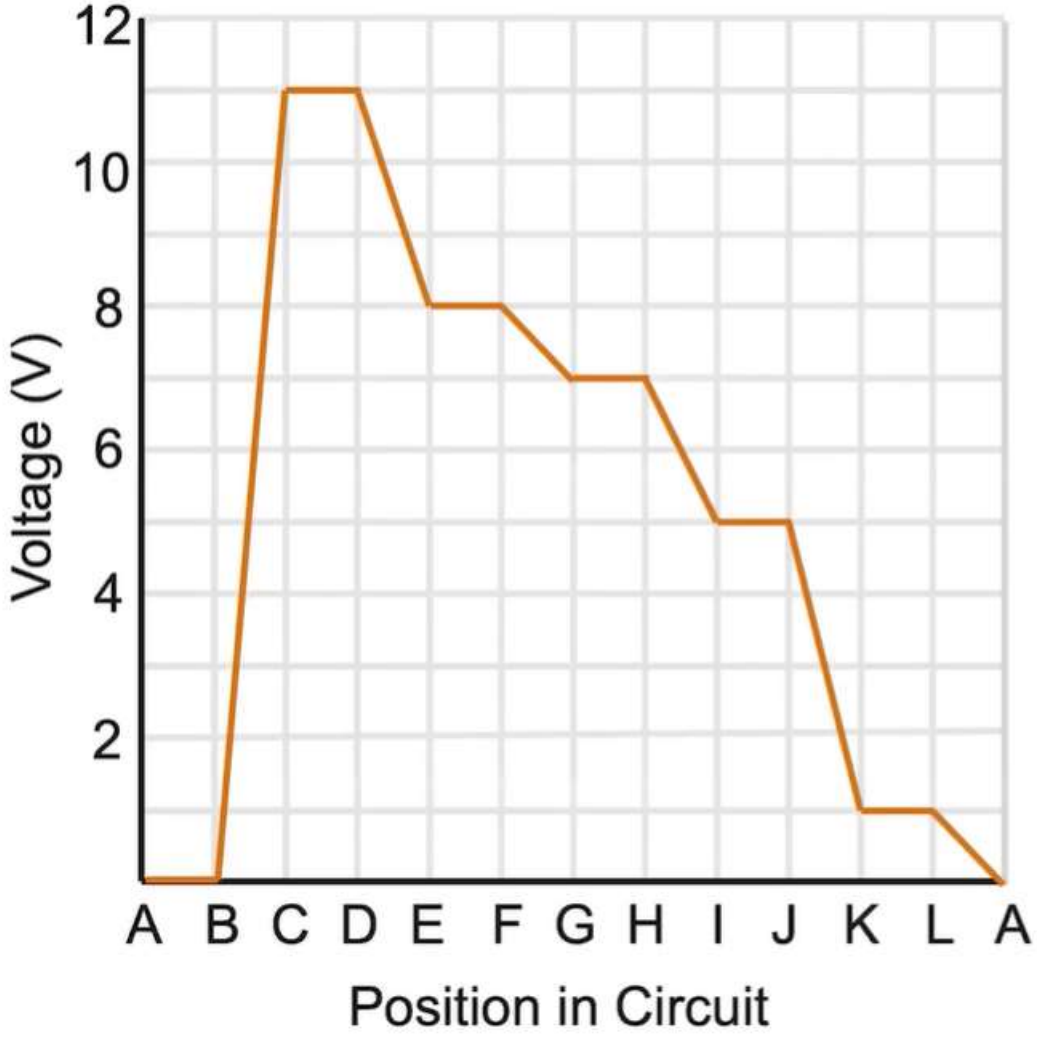
12
10
8
6
4
2
Voltage (V)
A B C D E F G H I J K L A
Position in Circuit

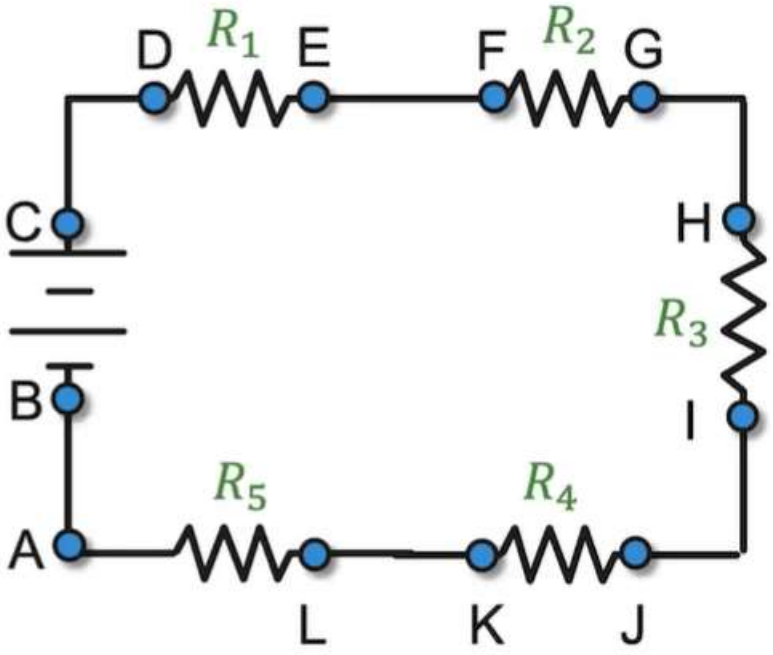
D
R_1
E
F
R_2
G
C
H
R_3
B
I
R_5
R_4
A
L
K
J

A complete loop around a circuit has a potential difference of ZERO

$$\sum \Delta V = 0$$

11.6.2

Kirchhoff’s Loops Rules as they apply to circuits without Junctions

A complete loop around a circuit has a potential difference of ZERO

$$\sum \Delta V = 0$$

Steps to write Kirchhoff's Loops

1. Choose a starting point. The **loop** must start and end at the same point.

2. Sketch in **currents**. **Direction does not matter!**

3. Sketch in **loops**. **Direction does not matter!**

4. Follow your **loop**. Use the chart on the next slide to determine if voltage contribution is positive or negative.

Problem Solving Rules

	Battery	Resistor
With Current AKA "Forward"	Loop goes from **negative to positive** terminal: 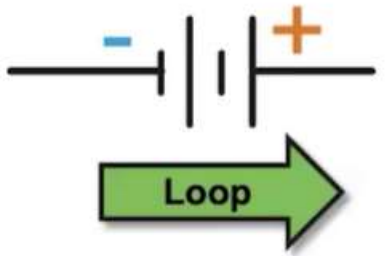 $+V$	Loop and current are in the **same direction**: 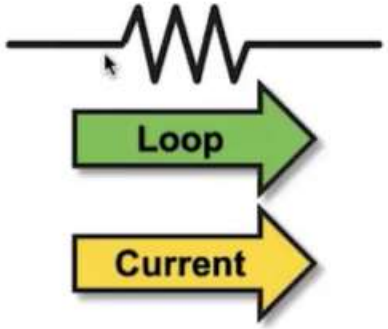 $-V$
Against Current AKA "Backward"	Loop goes from **positive to negative** terminal: 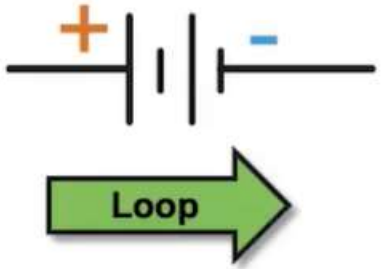 $-V$	Loop and current are in **opposite direction**: 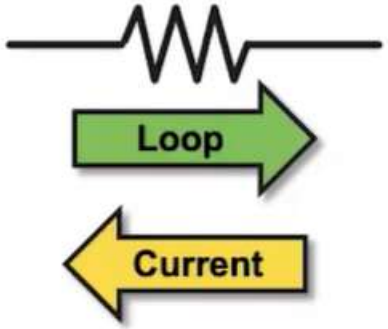 $+V$

Kirchhoff's Loop Rule: One Battery

1. Choose a starting point. The **loop** must start and end at the same point.

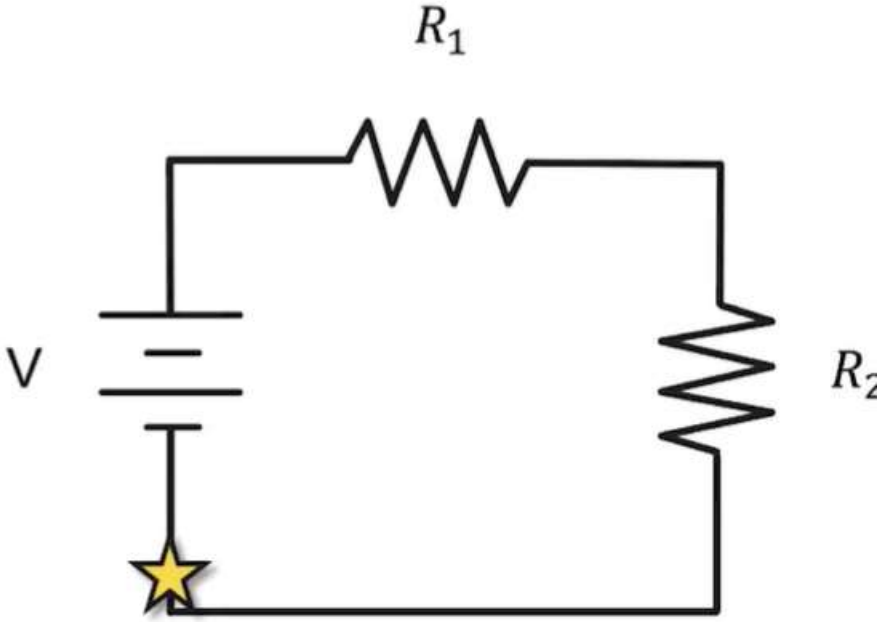

Kirchhoff's Loop Rule: One Battery

1. Choose a starting point. The **loop** must start and end at the same point.
2. Sketch in **currents**. **Direction does not matter!**
3. Sketch in **loops**. **Direction does not matter!**

$$+V - V_{R_1} - V_{R_2} = 0$$

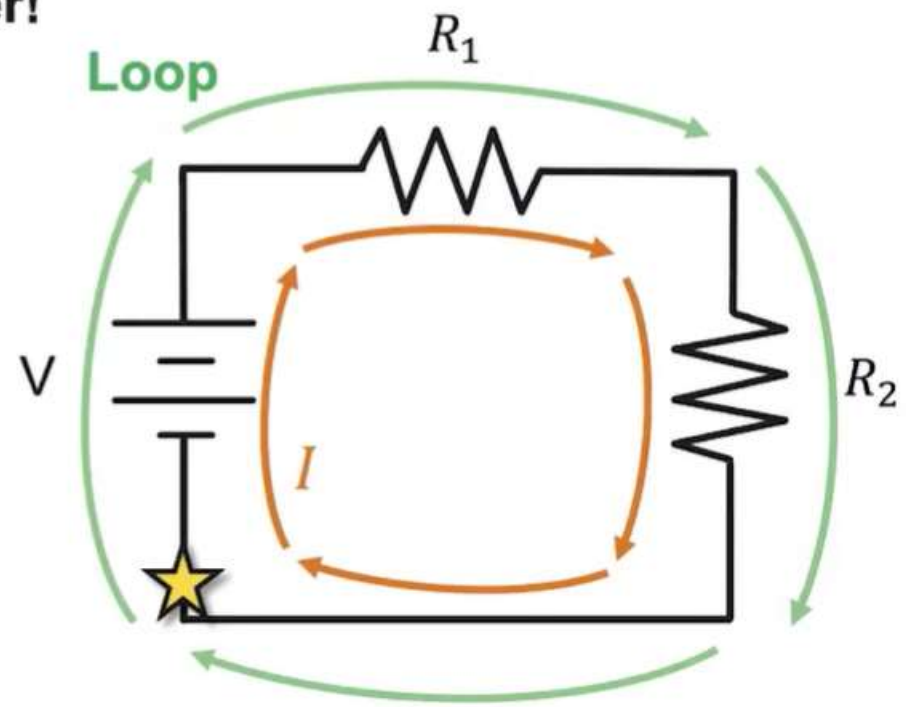

Kirchhoff's Loop Rule: One Battery

1. Choose a starting point. The **loop** must start and end at the same point.
2. Sketch in **currents**. **Direction does not matter!**
3. Sketch in **loops**. **Direction does not matter!**

$$+V - V_{R_1} - V_{R_2} = 0$$
$$+V - IR_1 - IR_2 = 0$$
$$+V - I(R_1 + R_2) = 0$$
$$V = I(R_1 + R_2)$$

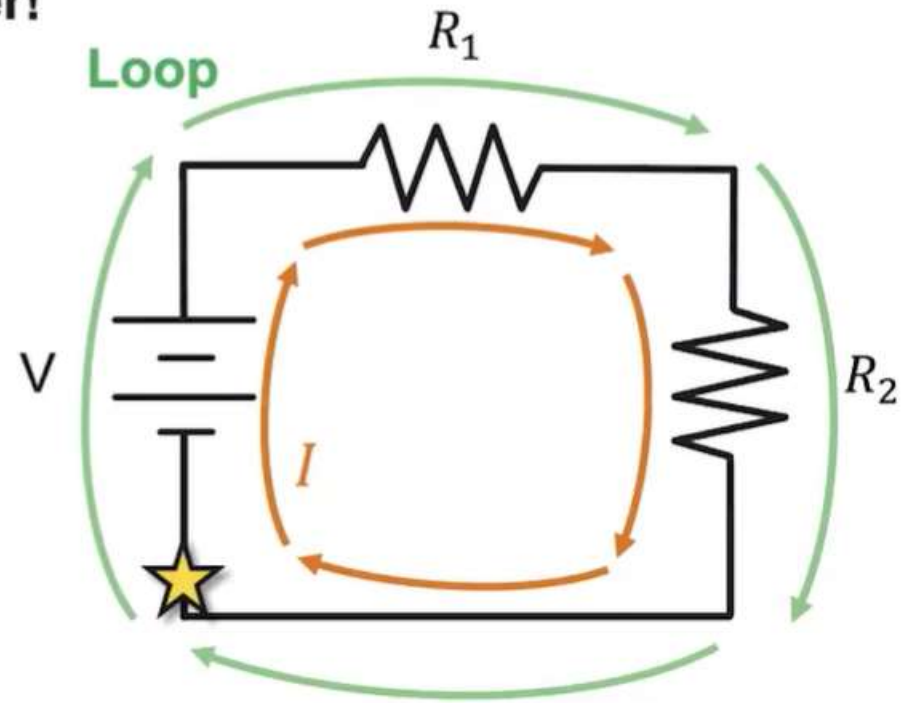

Kirchhoff's Loop Rule: Two Batteries

1. Choose a starting point. The **loop** must start and end at the same point.
2. Sketch in **currents**. **Direction does not matter!**
3. Sketch in **loops**. **Direction does not matter!**

$$+V_1 - V_R - V_2 = 0$$

$$+V_1 - IR - V_2 = 0$$

$$V_1 - V_2 = IR$$

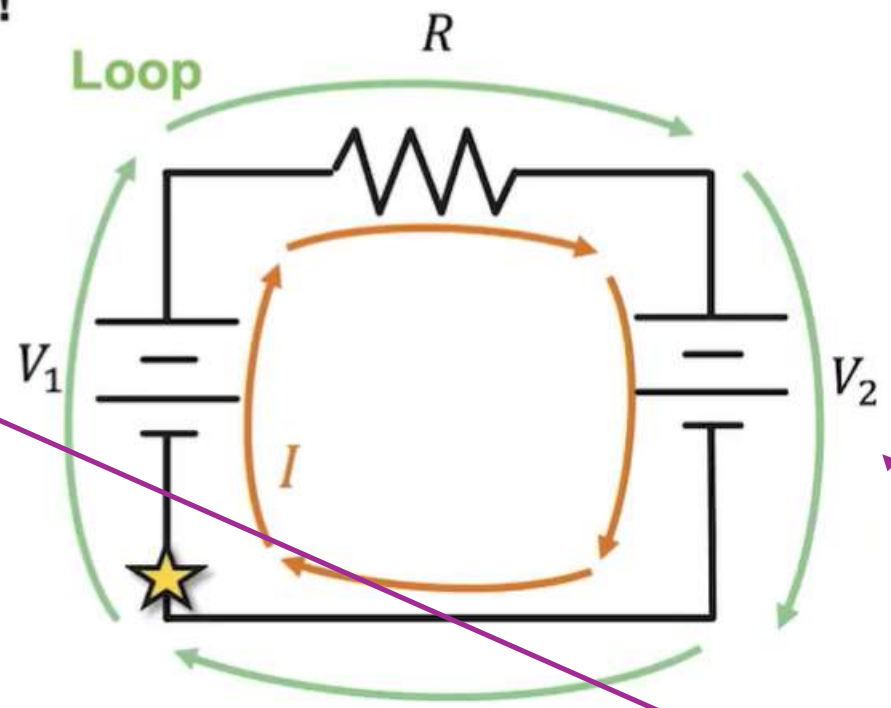

NOTE: Battery 2 is inserted BACKWARDS

Kirchhoff's Loop Rule: Two Batteries

Derive an expression for the current through the resistor

$$+V_1 - IR + V_2 = 0$$

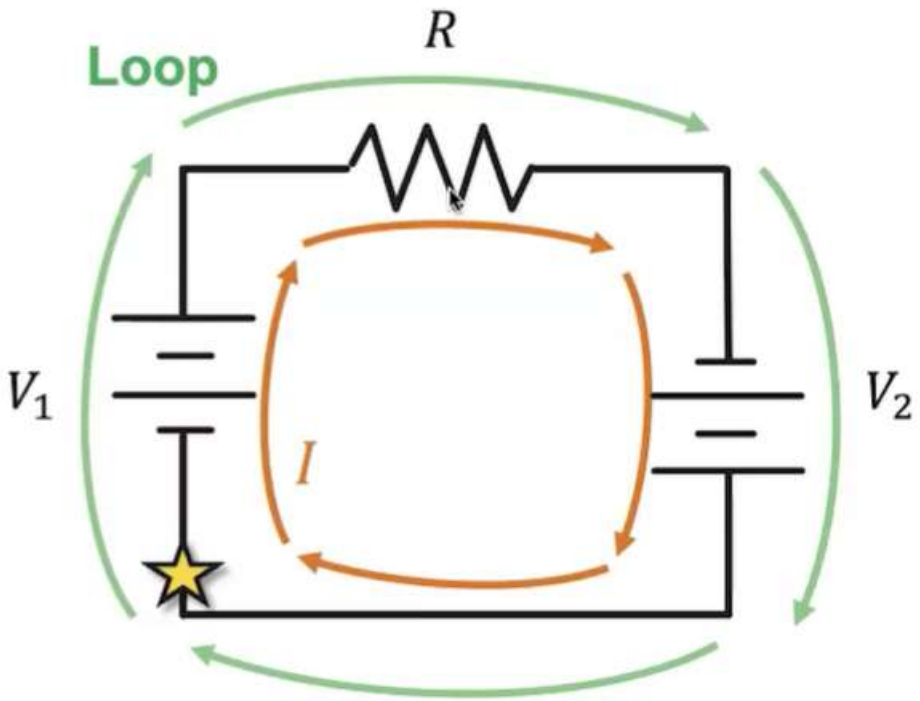

Kirchhoff's Loop Rule: Two Batteries

Derive an expression for the current through the resistor

$$+V_1 - IR + V_2 = 0$$

$$IR = V_1 + V_2$$

$$\boxed{I = \frac{V_1 + V_2}{R}}$$

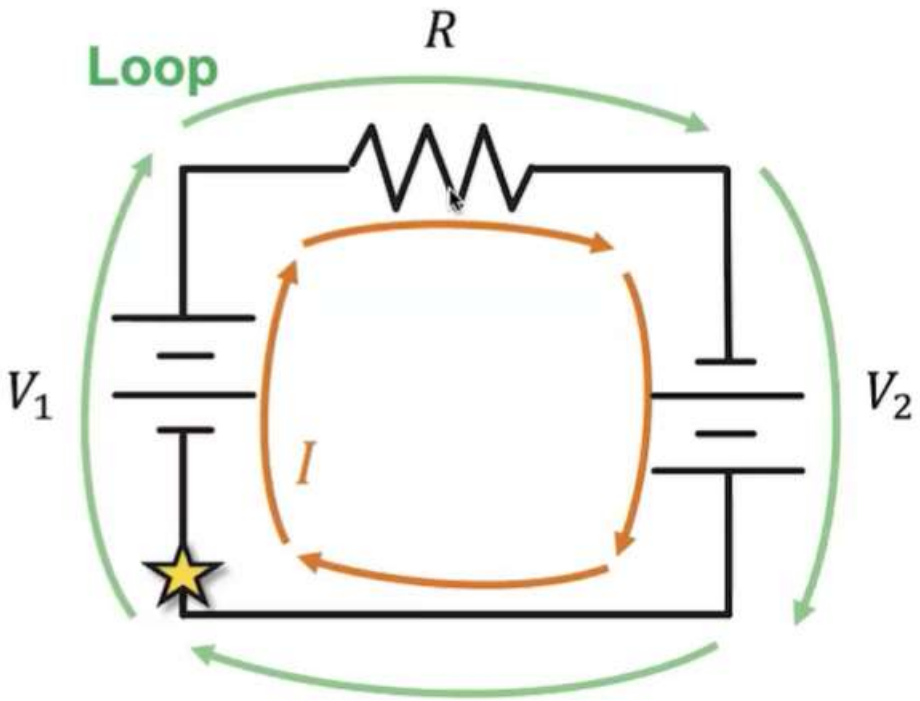

What if we drew the current going the other way?

Derive an expression for the current through the resistor

$$+V_1 + IR + V_2 = 0$$

$$IR = -V_1 - V_2$$

$$\boxed{I = -\frac{V_1 + V_2}{R}}$$

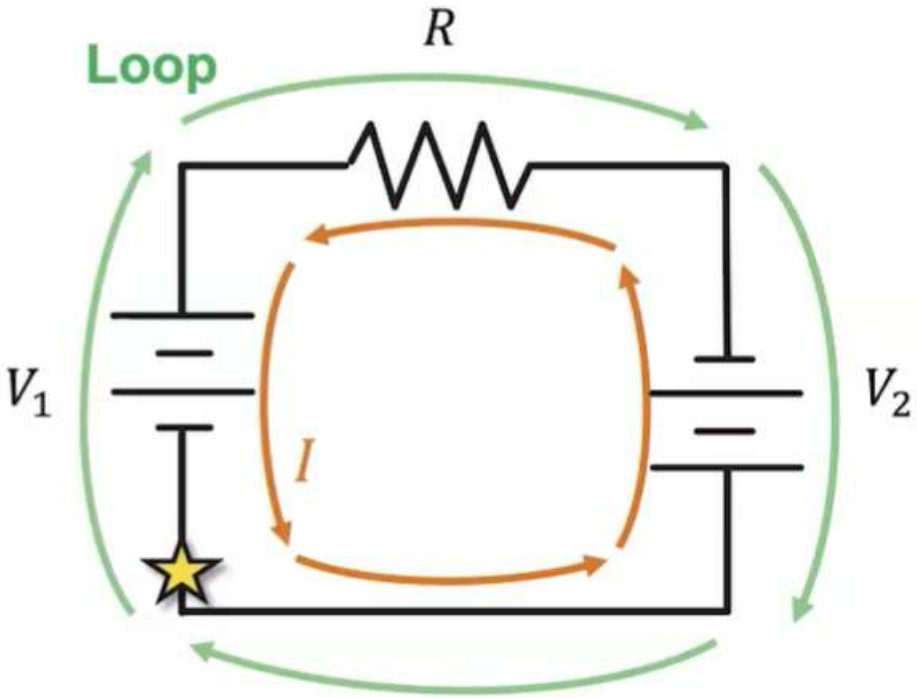

Takeaways

Kirchhoff's Loop Rule helps us solve more complicated circuits, that can't be solved with Ohm's Law alone (like situations with multiple batteries)!

11

Electric Circuits

11.7

Kirchhoff’s Junction Rule

11.7.1

How Conservation of Charge Leads to Kirchhoff’s Junction Rule

Kirchhoff's Junction Rule:

$$\sum I_{in} = \sum I_{out}$$

Conservation of Charge:

The same amount of charge entering the junction must also exit the junction.

Junctions

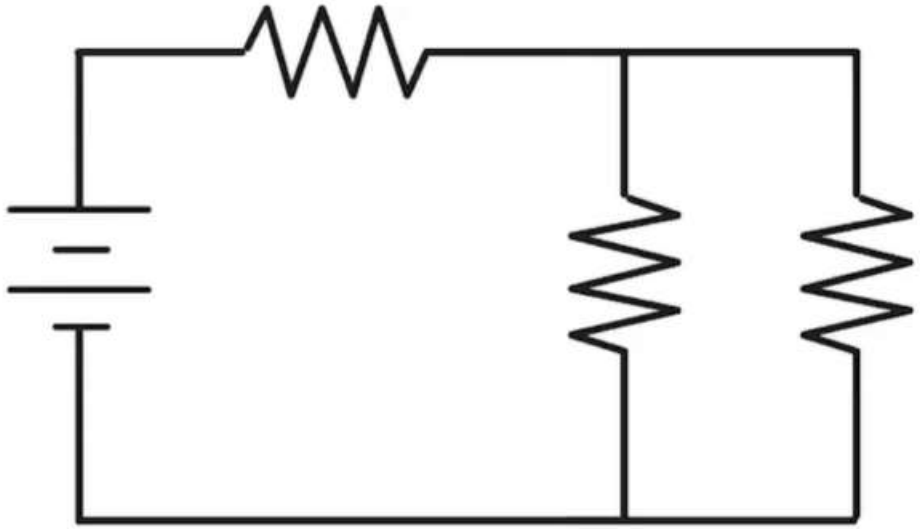

Junctions

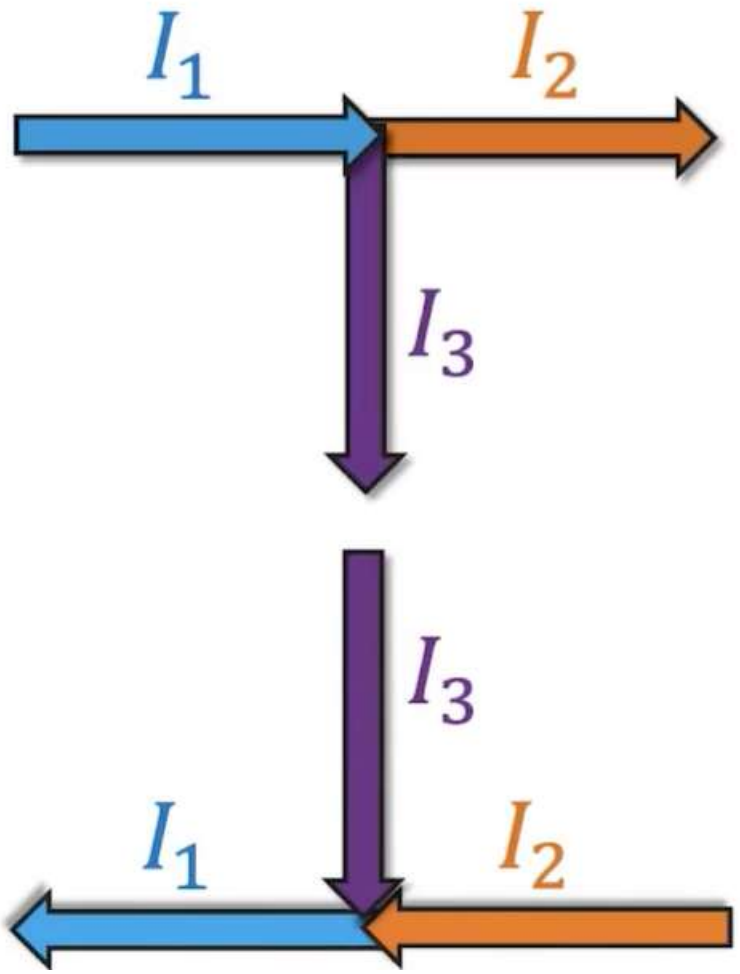

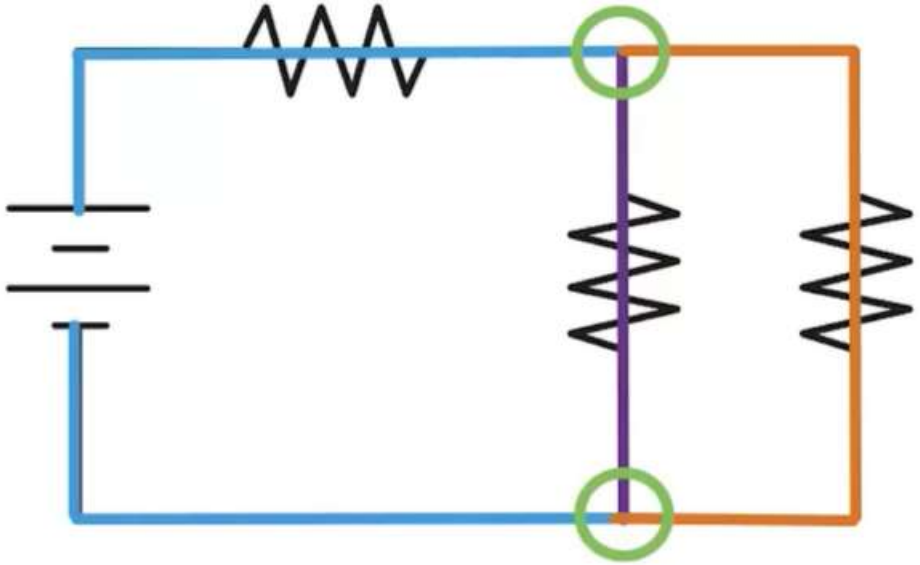

$$I_1 = I_2 + I_3$$

Now with values!

If the current through R_1 is $10\ A$ and the current through R_2 is $6\ A$, what is the current through R_3?

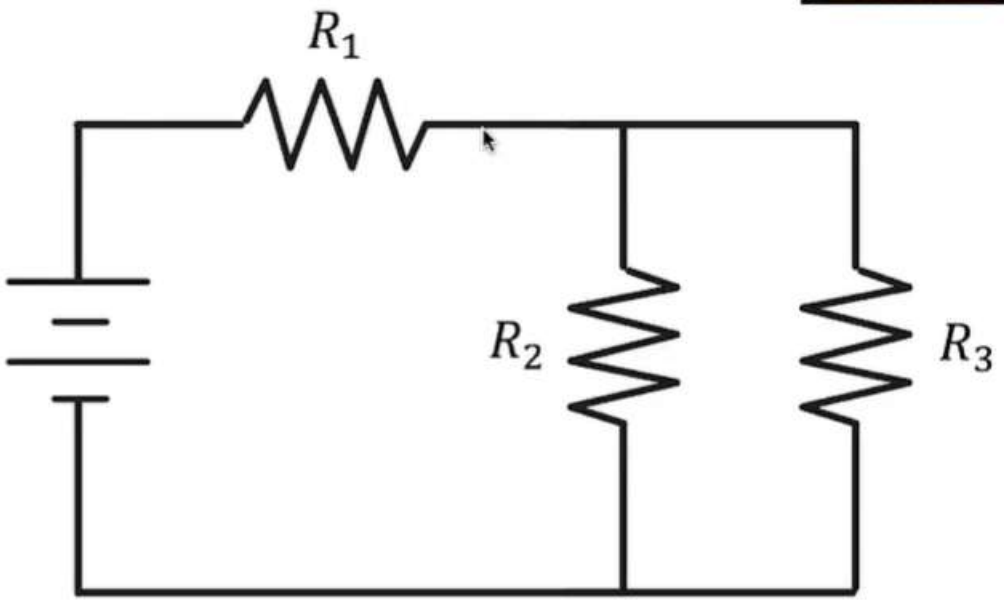

Now with values!

If the current through R_1 is $10\ A$ and the current through R_2 is $6\ A$, what is the current through R_3?

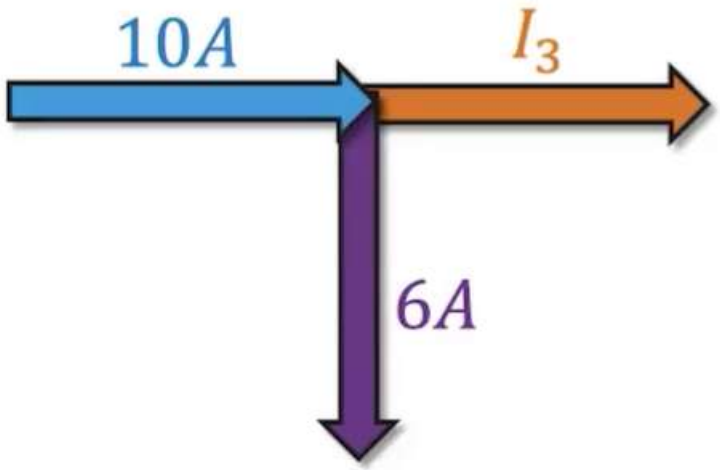

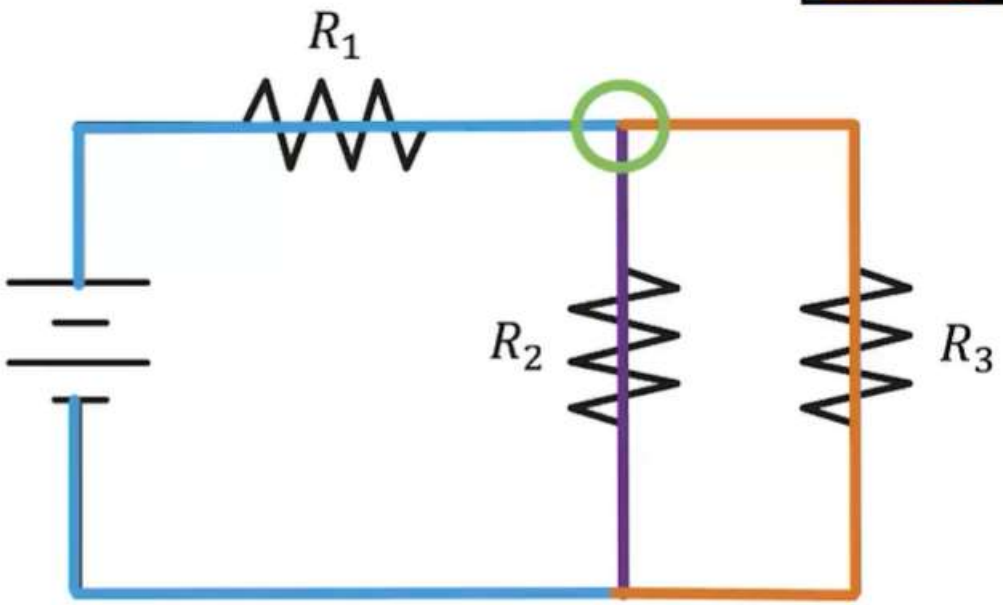

$$\sum I_{in} = \sum I_{out}$$

$$10A = 6A + I_3$$

$$I_3 = 4A$$

Kirchhoff's Junction Rule:

$$\sum I_{in} = \sum I_{out}$$

11.7.2

Kirchhoff’s Loop and Junction Rules as a means of solving complex Circuits

Kirchhoff's Junction Rule:

$$\sum I_{in} = \sum I_{out}$$

Kirchhoff's Loop Rule:

A complete loop around a circuit has a potential difference of ZERO.

$$\sum \Delta V = 0$$

Steps to write Kirchhoff's Loops

- Choose a starting point. The **loop** must start and end at the same point.
- Sketch in **currents**. **Direction does not matter!**
- Sketch in **loops**. **Direction does not matter!**
- Follow your **loop**. Use chart on next slide to determine if voltage contribution is positive or negative

Problem Solving Rules

Battery	Resistor
Loop goes from **negative to positive** terminal: 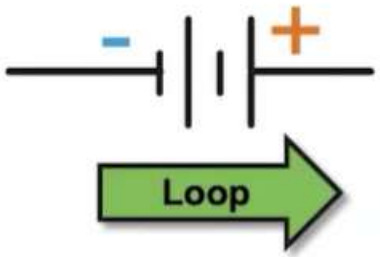 $+V$	Loop and current are in the **same direction**: 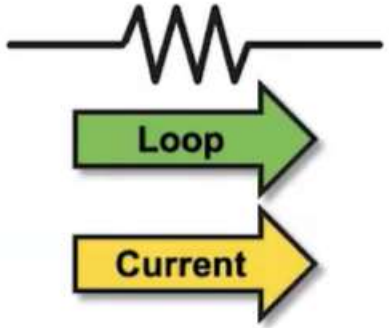 $-V$
Loop goes from **positive to negative** terminal: 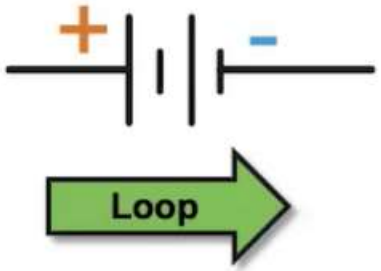 $-V$	Loop and current are in **opposite direction**: 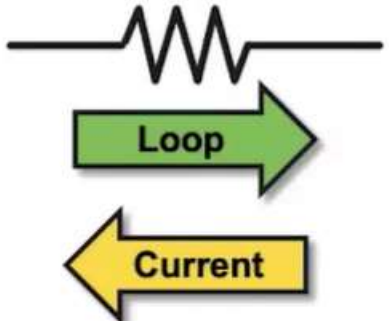 $+V$

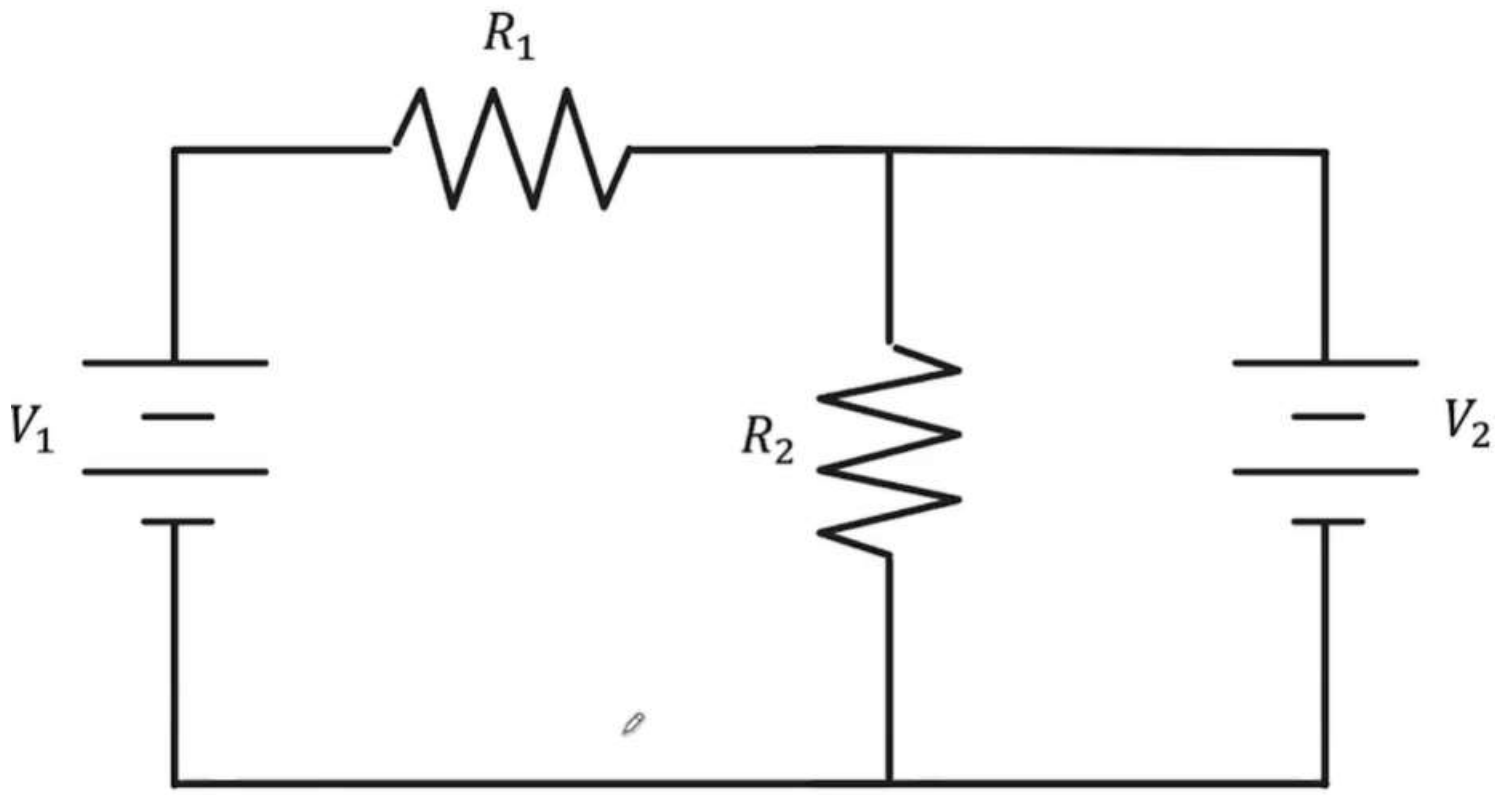
R_1
V_1
R_2
V_2

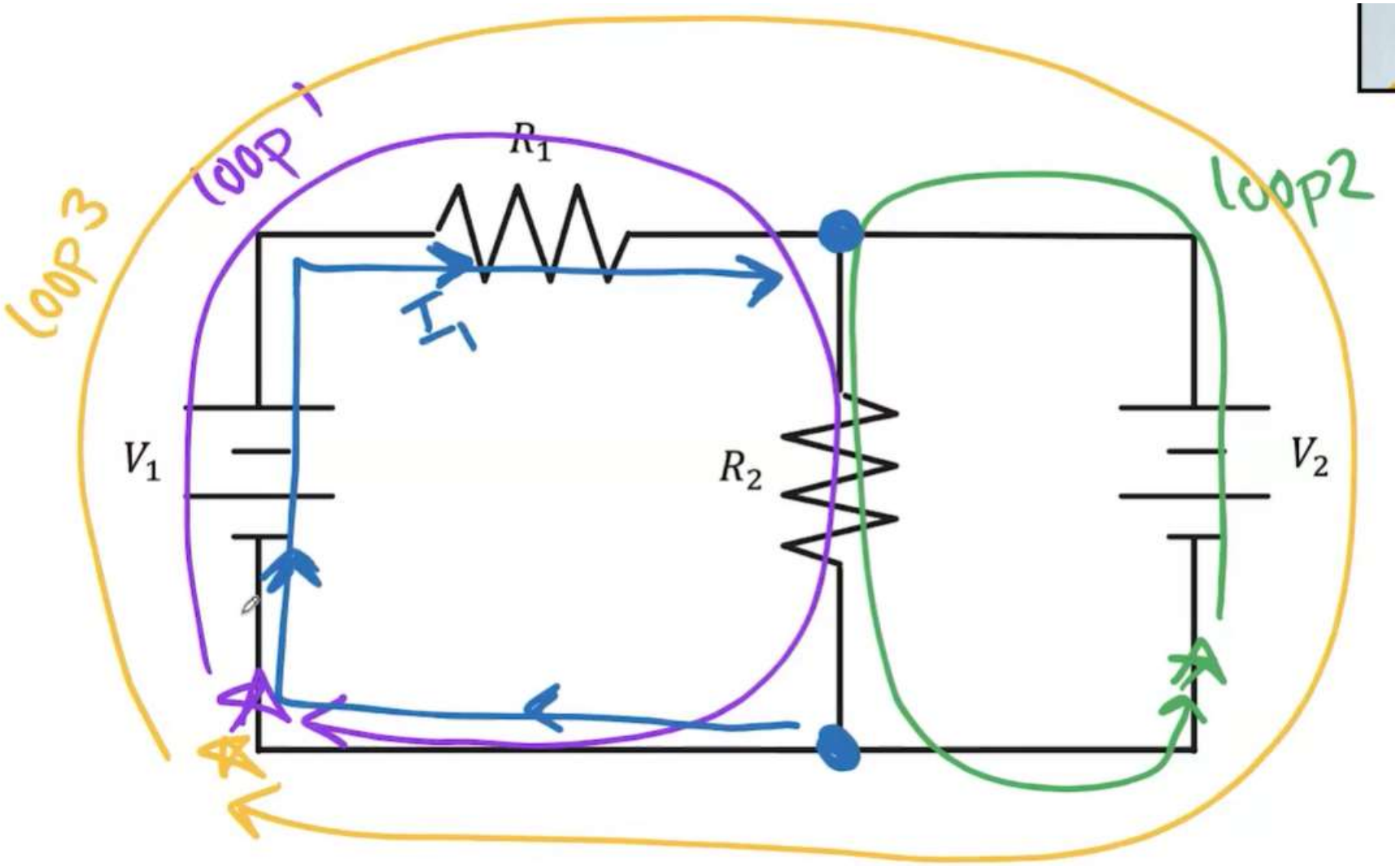
loop 3
loop 1
loop2
R_1
I_1
V_1
R_2
V_2

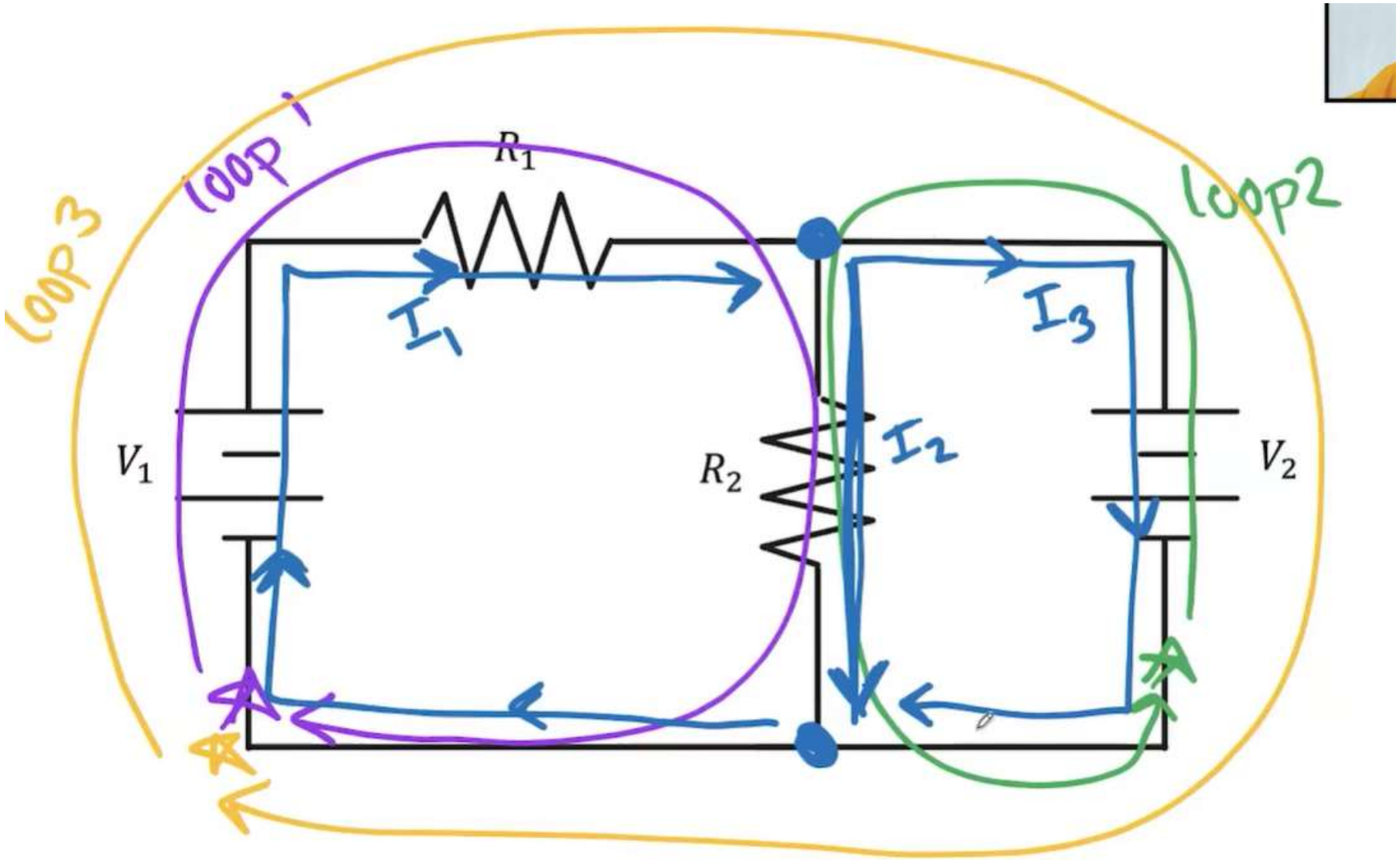
loop 3
loop 1
loop2
R_1
I_1
I_3
I_2
V_1
R_2
V_2

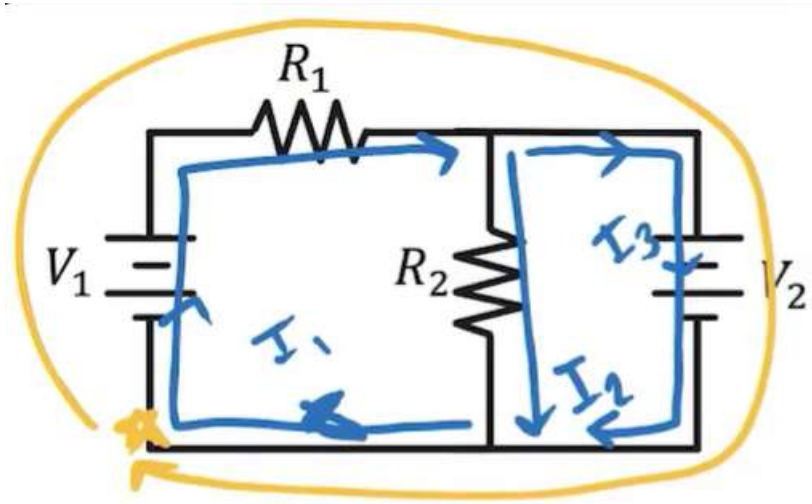

$$V_1 - I_1R_1 - I_2R_2 = 0$$

$$V_2 - I_2R_2 = 0$$

$$V_1 - I_1R_1 - V_2 = 0$$

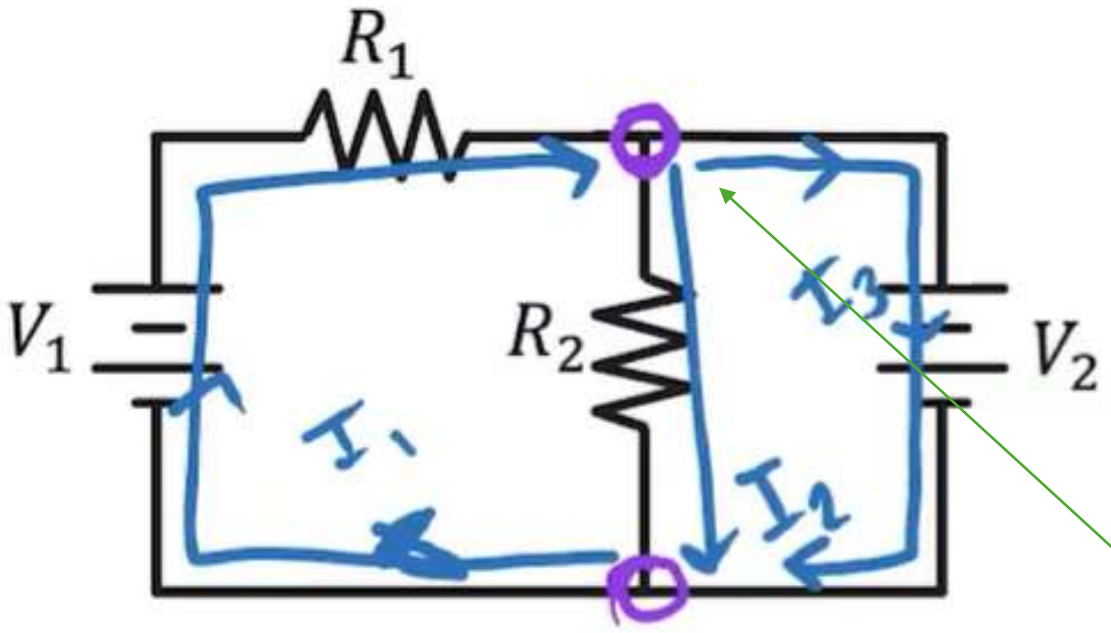

$$V_1 - I_1R_1 - I_2R_2 = 0$$

$$V_2 - I_2R_2 = 0$$

$$V_1 - I_1R_1 - V_2 = 0$$

$$I_1 = I_2 + I_3$$

These will create a SYSTEM OF EQUATIONS!

Takeaways

Kirchhoff's Loop Rule
&
Kirchhoff's Junction Rule

Very powerful tools to solve more complex circuits that can't be simplified into an equivalent resistance

Exit Ticket:

Kirchhoffs' Rules Example (Linear System of 3 Variables)

30. (II) Calculate the magnitude and direction of the currents in each resistor of Fig. 19–58.

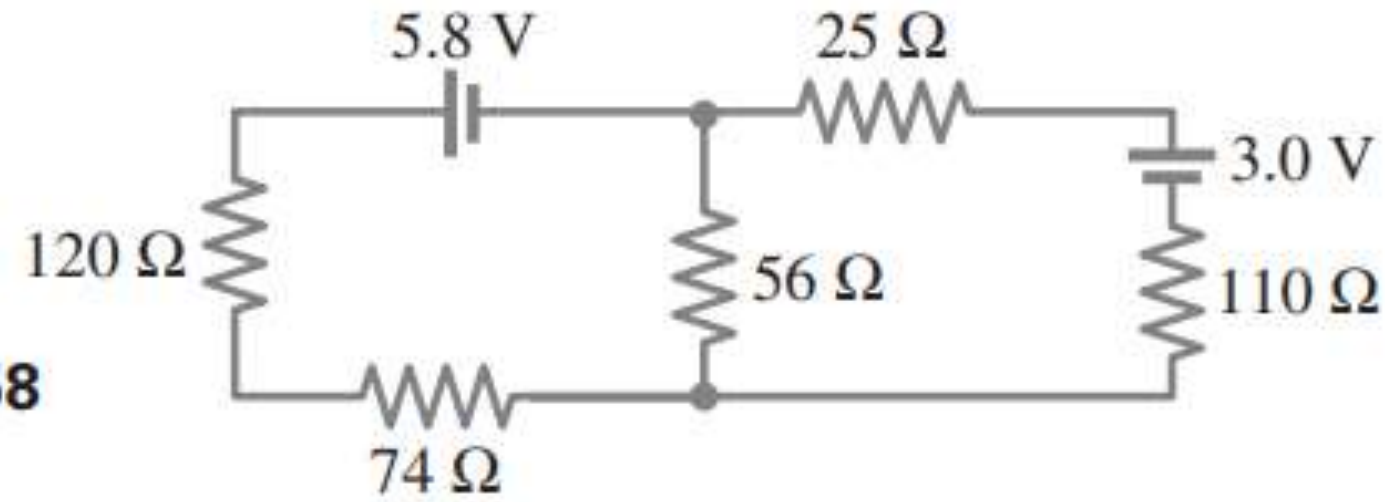

FIGURE 19–58
Problem 30.